EMU LED Button PCB Assembly Manual

EMU - The Expandable Multi material Unit

VERSION 2026-03-11

PART PRINTING GUIDELINES

To have the best chance of success, the following print settings are highly recommended.

3D PRINTING PROCESS

Fused Deposition Modeling (FDM)

MATERIAL

ABS/ASA. Glass and CF filled material are compatible.

Use natural ABS for the diffuser.

LAYER HEIGHT

Mandatory: **0.2mm, including first layer.**

EXTRUSION WIDTH

0.4mm, Arachne slicing engine.

Infill can be printed wider (0.45/0.48) to increase layer bonding.

INFILL TYPE

Gyroid or Cubic

INFILL PERCENTAGE

Recommended: **15%**

WALL COUNT

Recommended: **4**

SOLID TOP/BOTTOM LAYERS

Recommended: **5**

Depending on your source, the LED board may require you to solder the 5 pin JST connector. Preheat your soldering iron to 320C, flow some solder on the iron tip to ensure its clean, insert and solder the connector.

CAUTION:
Be mindful when soldering to not touch the LEDs with a hot soldering iron, as they will melt!
Use a fine soldering tip to avoid colliding with the PCB parts.
Pay attention to the connector orientation!

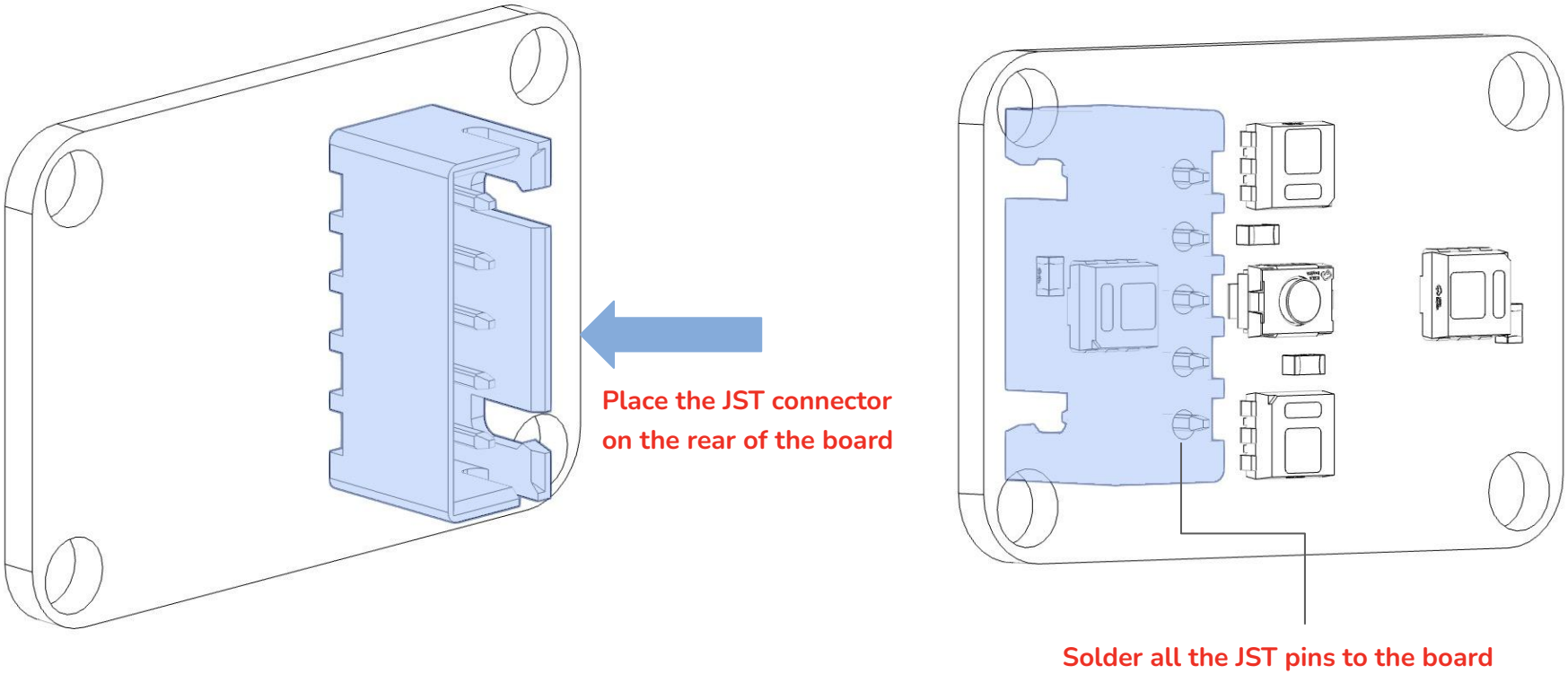

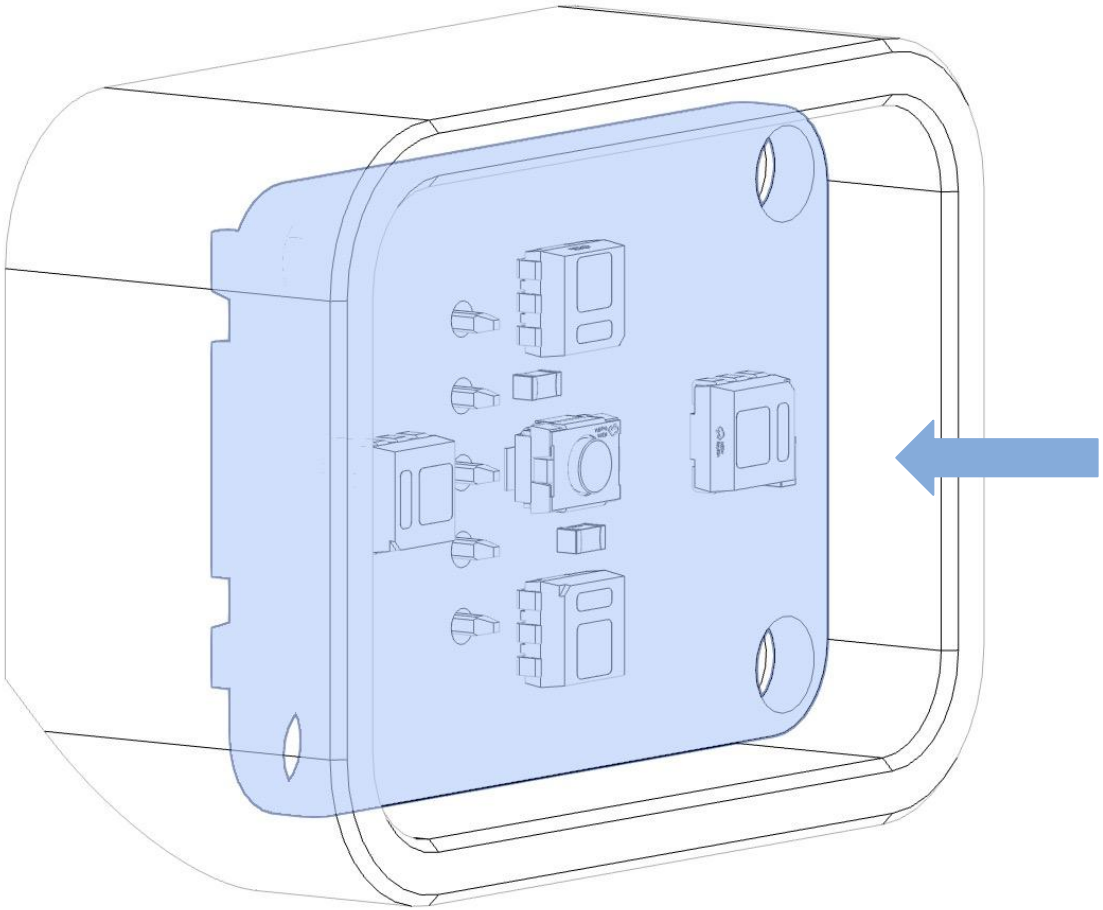

Place the LED Button PCB in the Button Rear assembly.

Make sure it sits flush with the rear surface.

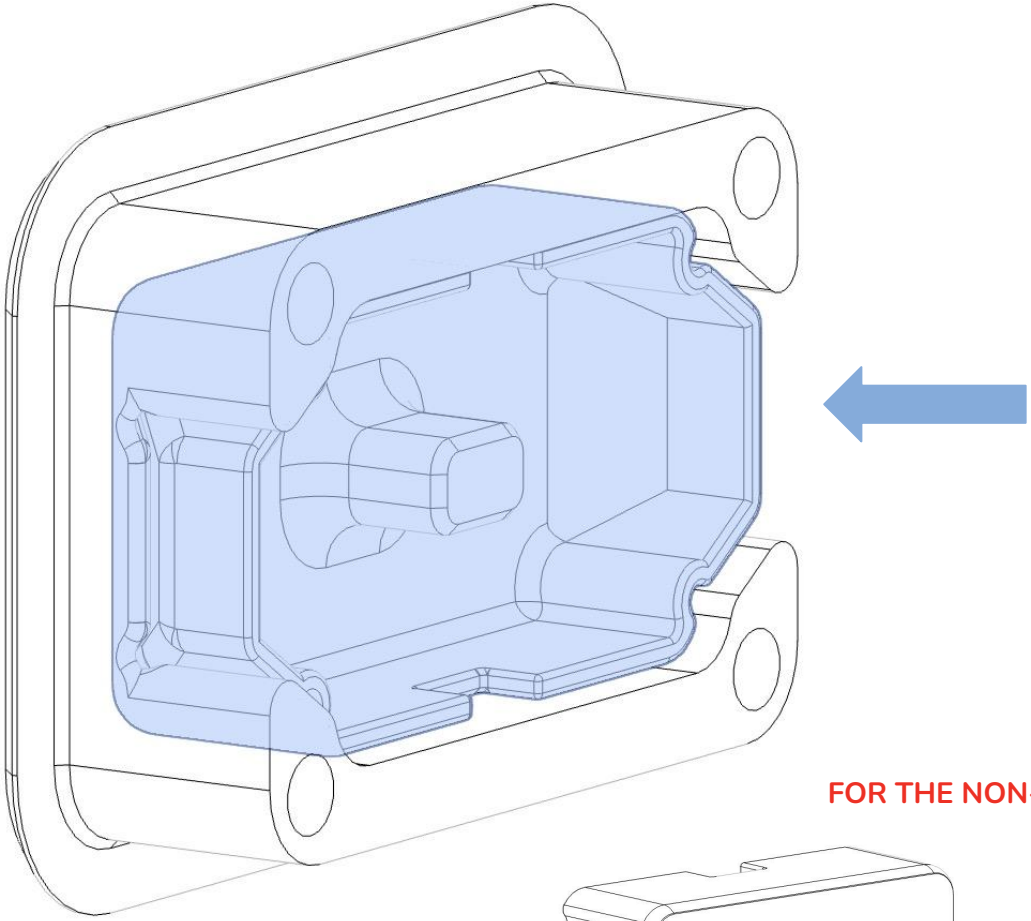

Place the Button Diffuser in the Button Front assembly.

Using the MMU diffusers is highly recommended for a seamless, numbered lane look

FOR THE NON-MMU VERSION

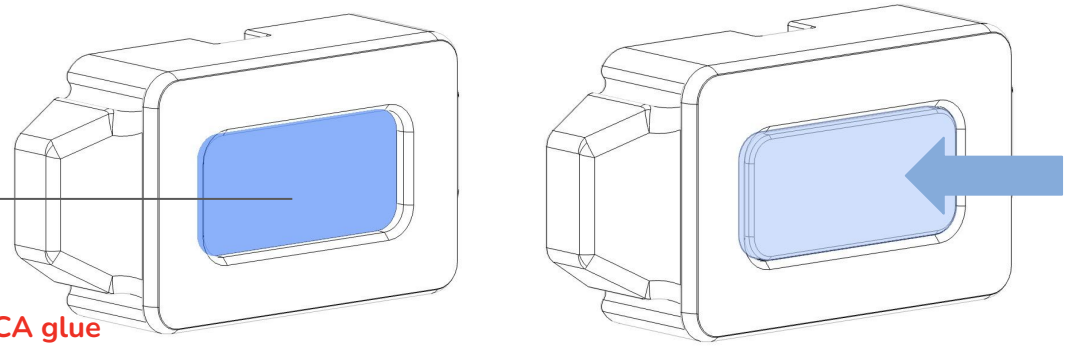

Place a dab of CA glue

Place the button filter and squeeze till the glue sets

Place the front assembly in the base.

Tilt the base slightly so that the diffuser doesn't fall out.

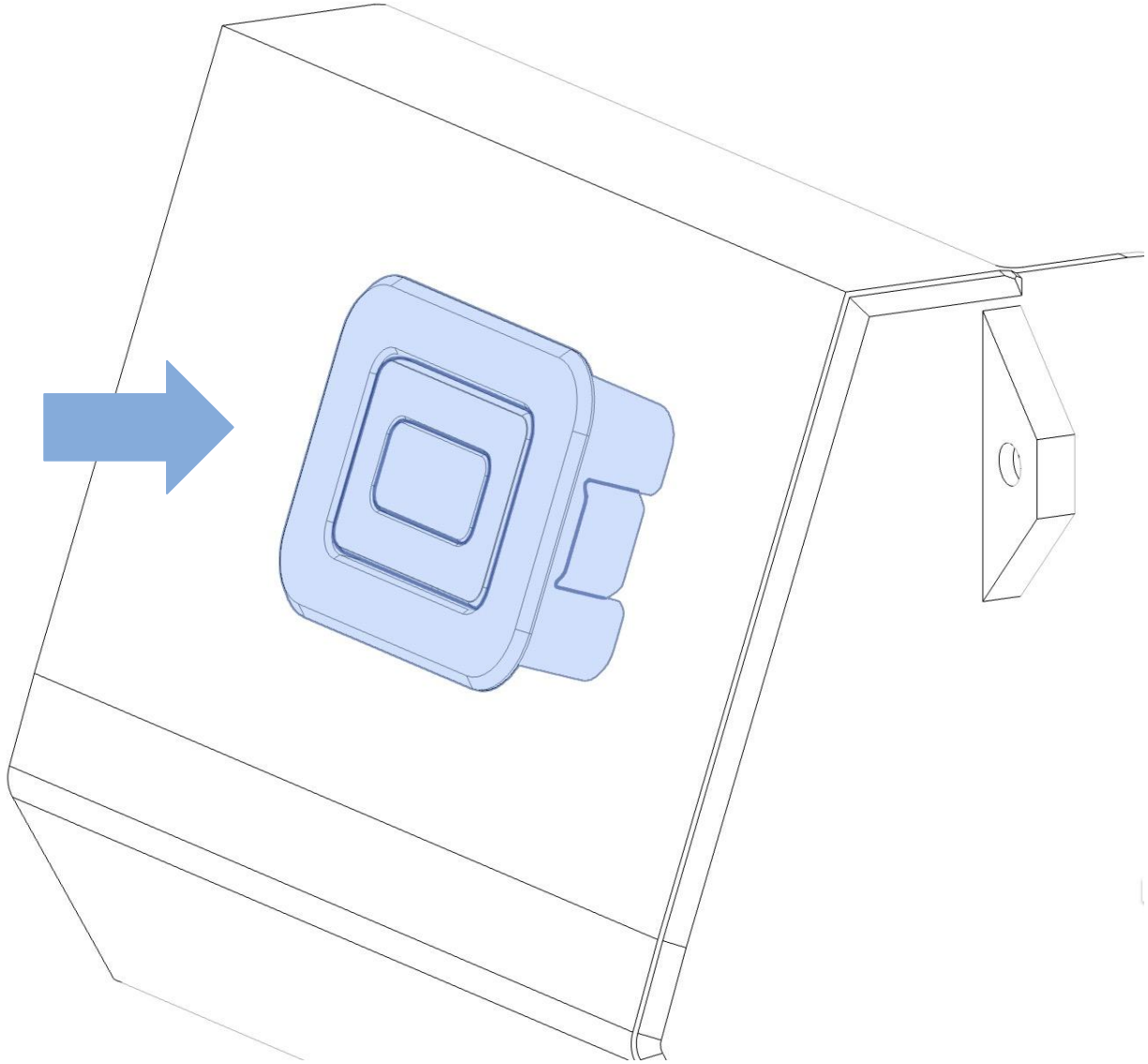

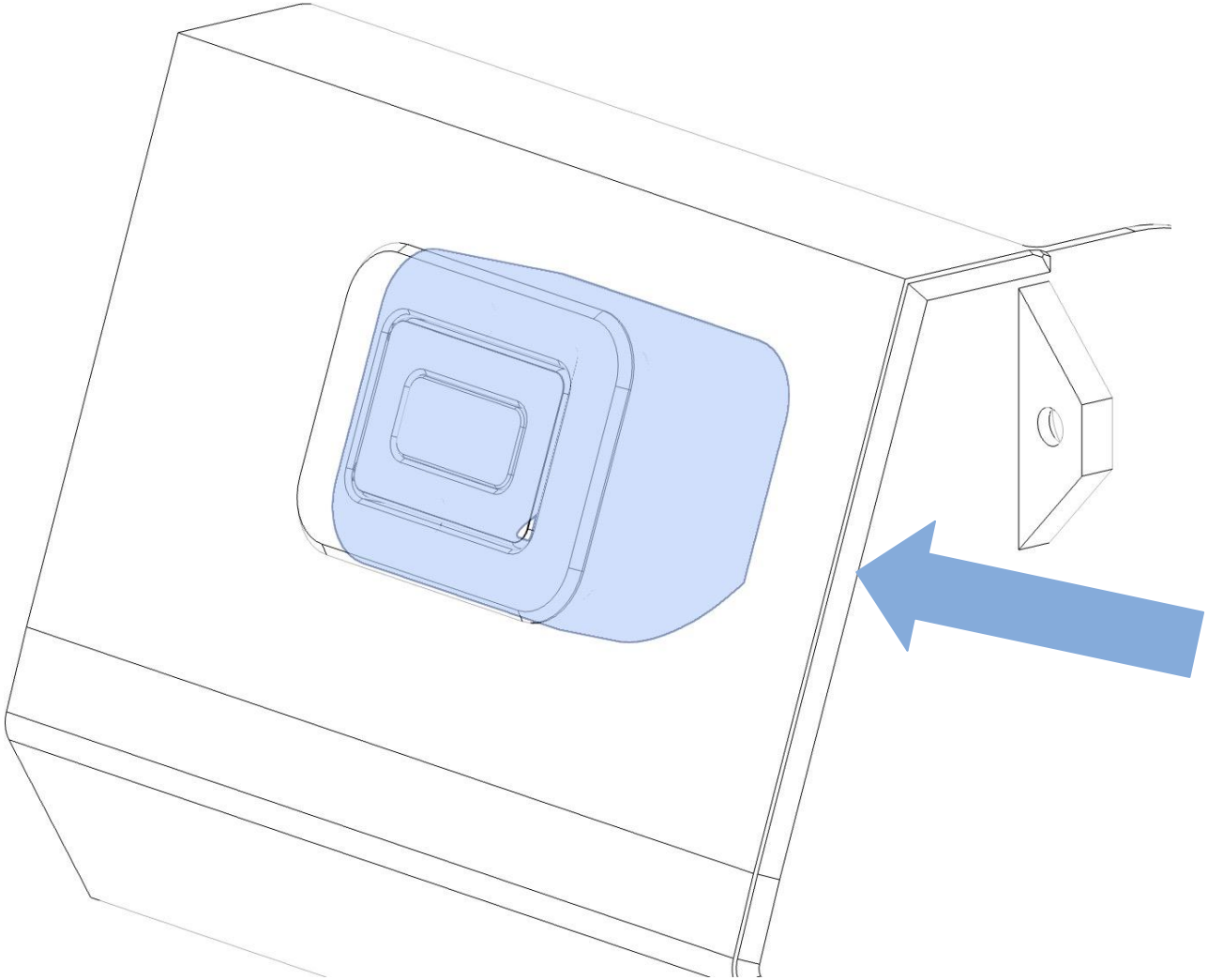

Place the rear of assembly in the base and squeeze the parts so they fully seat against each other.

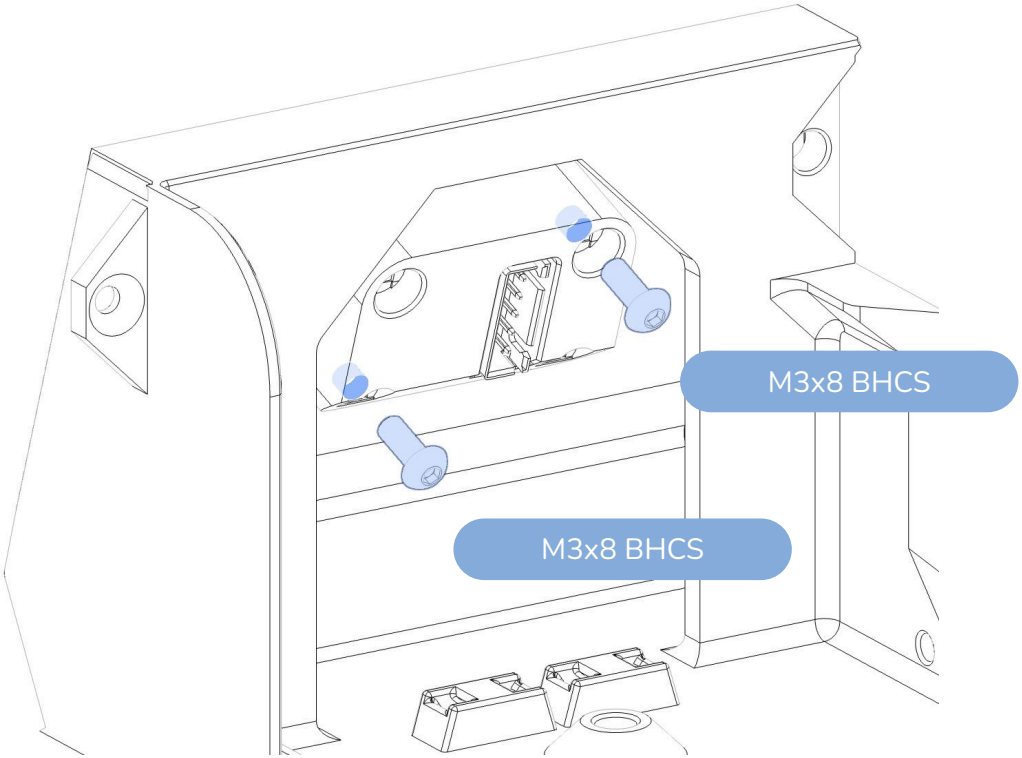

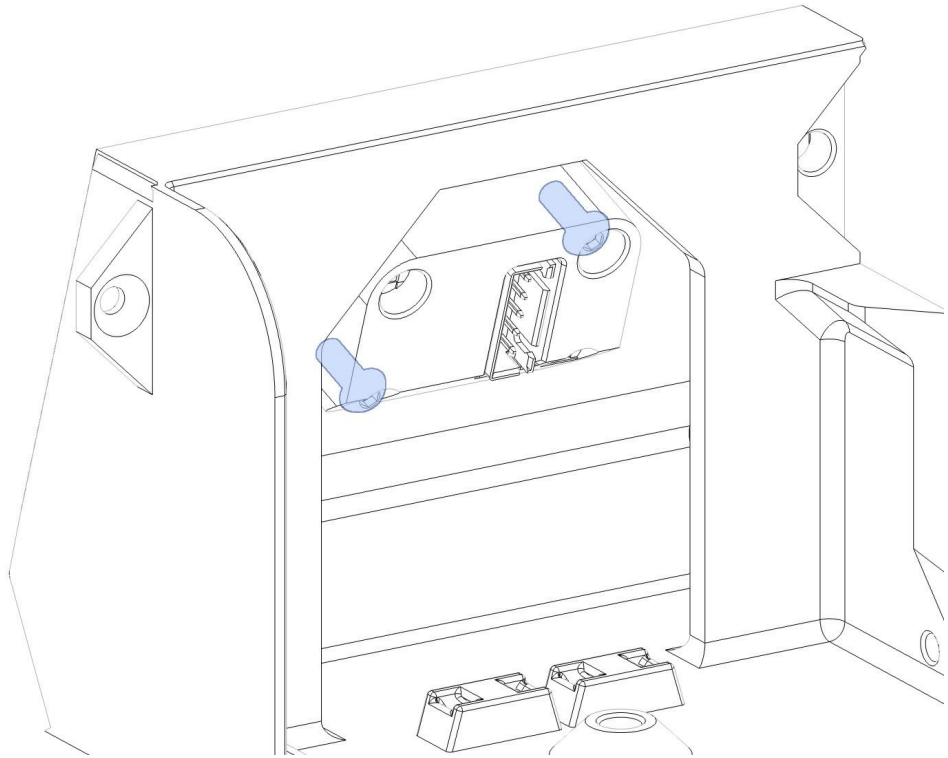

Careful not to overtighten!

If you've stripped the screw threads, you can use the other two available screw holes.